5. Diagram of the operating principle of the overheat relay

a. Model: MT3-22 ~ 150

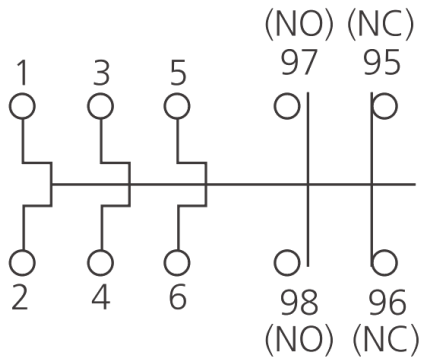

b. Model: MT3-225 ~ 630

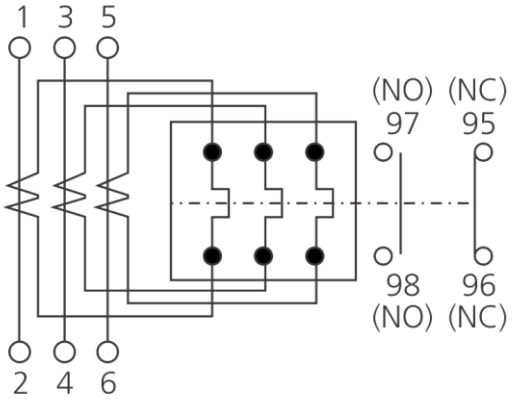

BTB ELECTRIC REALVALUE FORLIFE

Designed by NEXUS BTB ELEKTRİK ÜRETİM TİCARET ANONİM ŞİRKETİ
Add: Ortaköy Mah. Ambarlıdere Yolu Sk. Lotus Vorld No. 6 İç Kapı
No: 5 Beşiktaş / İstanbul, Türkiye
E-mail: sales@btb-electric.com | Tel: +90 212 401 6903
Web: btb-electric.com

INSTRUCTIONS FOR USING

Thermal Overload Relays

BTB ELECTRIC

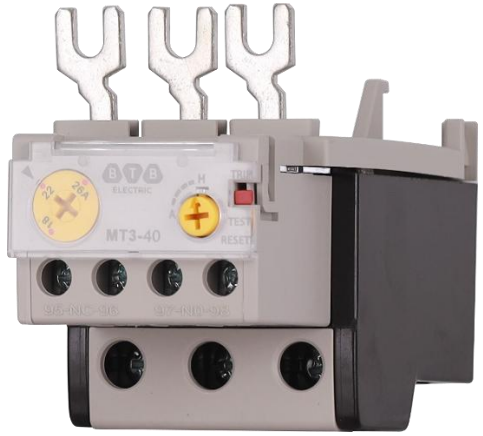

⚠ Disconnect power from the source before performing installation, modification, or maintenance.

⚠ Terminal screws must be properly tightened and checked frequently.

A thermal relay is a protective device for electrical circuits and motors, designed to disconnect the circuit when the current exceeds the preset value for a specified period. This prevents overload, short circuits, or motor damage.

- When current flows through the thermal relay and exceeds the preset value, the thermal element (bimetallic strip) expands.
- After a certain period (depending on the current level and relay design), the bimetallic strip bends, causing the relay's contact to open and disconnect the circuit.

1. Installation Instructions

a. Preparation:

- Determine the power and rated current of the motor (refer to the table below) to select a suitable thermal relay.
- Carefully read the manufacturer’s instruction manual.

b. Installation:

- Ensure the system is powered off before installation.
- Connect the input terminals to the rear side of the contactor.
- Connect the output terminals to the motor or the device to be protected.
- Ensure secure electrical connections to avoid looseness and sparking.

2. How to install

- Determine the rated current of the motor (Iđm)
- Adjust the current on the thermal relay: Turn the current adjustment knob (usually marked with a scale or numerical range) to the value corresponding to Iđm or slightly higher (typically 1.1 – 1.2 times Iđm).
- Select the reset mode:

- Automatic (A): The relay will automatically reset when the temperature drops to a safe level
- Manual (H): Press the reset button to restore operation after a trip.

3. Maintenance and notes

a. Maintenance:

- Regularly clean the contacts to prevent dust accumulation or oxidation.
- Check the operation of the adjustment knob and reset button.

b. Notes:

- Do not set the thermal relay significantly higher than the motor's rated current.
- Ensure proper ventilation in the system to avoid overheating the relay.
- Install the product ensuring a space of at least what is specified in the instruction manual. Failure to do so may result in fire or scorching.
- For wiring, select wire sizes suitable for the applied voltage and current. Tighten wires with the specified tightening torque as stated in the instruction manual, and maintain the correct torque. Failure to do so may result in fire.
- Installation, maintenance, and inspection of the product should be performed by qualified engineers with specialized knowledge. Failure to do so may result in fire or scorching.
- Do not use the product after removing its arc-extinguishing chamber. Electric shock or burns may result.
- Operate within the minimum and maximum range as indicated by the arrow. Current settings can be adjusted using the dots or graduation standards (refer to the diagram). Improper handling may cause faults or accidents.
- Treat the product as industrial waste when discarding.

4. Quick option for thermal overload relays

Rated Operational Power		Thermal Overload Relays		AC Contactor
kW	Current at 400V (A)	Model	Setting Range	Model
0.37	1.1	MT3-22	1~1.6	MC3-9
0.55	1.5	MT3-22	1~1.6	MC3-9
0.75	1.9	MT3-22	1.6~2.5	MC3-9
1.1	2.7	MT3-22	2.5~4	MC3-9
1.5	3.6	MT3-22	2.5~4	MC3-9
2.2	4.9	MT3-22	4~6	MC3-9
3.0	6.5	MT3-22	5~8	MC3-12
4.0	8.5	MT3-22	7~10	MC3-12
5.5	11.5	MT3-22	9~13	MC3-18
7.5	15.5	MT3-22	12~18	MC3-22
11	22	MT3-40	18~25	MC3-32
15	29	MT3-40	24~36	MC3-40
18.5	35	MT3-40	28~40	MC3-40
22	41	MT3-85	34~50	MC3-50
30	55	MT3-85	45~65	MC3-65
37	66	MT3-85	54~75	MC3-75
45	80	MT3-85	63~85	MC3-85
55	90	MT3-150	70~95	MC3-100
59	97	MT3-150	80~105	MC3-130
75	125	MT3-150	110~150	MC3-150
90	146	MT3-225	120~185	MC3-185
110	178	MT3-225	160~240	MC3-225
132	215	MT3-225	160~240	MC3-225
160	256	MT3-630	220~300	MC3-330
200	330	MT3-630	300~500	MC3-400
220	353	MT3-630	300~500	MC3-400
250	401	MT3-630	300~500	MC3-500
300	481	MT3-630	380~630	MC3-630